ROOF HATCH- Diamond Series™ RHDG Steel

Ladder Access Hatch

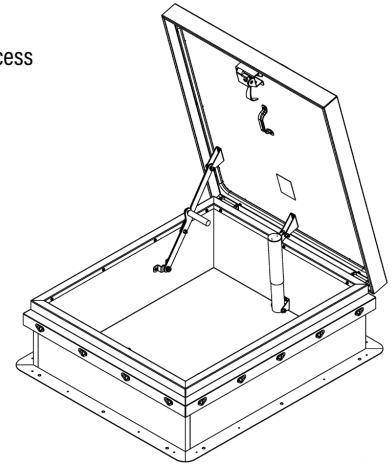

Stair Access Hatch

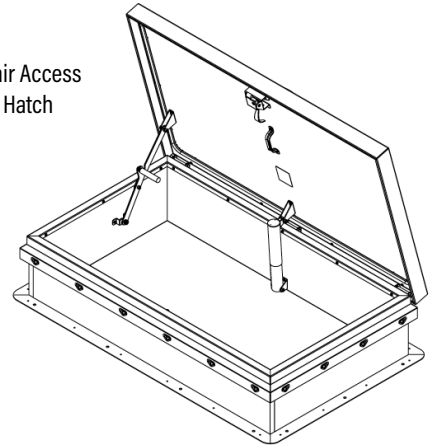

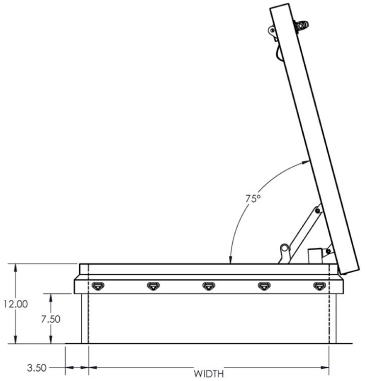

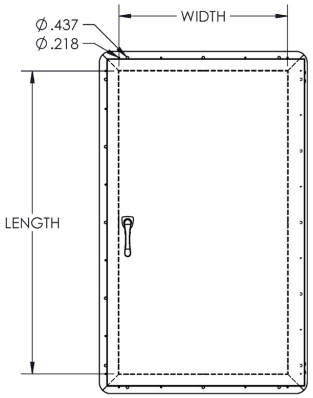

SPECIFICATIONS:

(1) Curb: Single wall curb and counterflashing with Diamond Grip to secure roof membrane without tools.
- 14 gauge galvannealed steel, white textured powder coat paint

(2) Cover: Formed and welded with liner, tested to support a live load of 40psf.
- 14 gauge with 22 gauge liner galvannealed steel, white textured powder coat paint

(3) Gasket: Continuous, weatherproof EPDM sponge rubber adhesive-backed seal.

(4) Insulation: 1" polyisocyanurate in curb and cover with thermal resistance R-6.

(5) Spring: Counterbalanced compression springs contained in clear zinc-plated steel cylinders.

(6) Latch: Clear zinc-plated steel slam latch with inside and outside handles and padlock hasps. Tested to 50psf wind uplift.

(7) Hold Open Arm: Clear zinc-plated automatic locking hold open arm with red vinyl grip for one handed door operation.

(8) Hinge: Heavy duty clear zinc-plated steel pintle hinge.

Notes: For pitched roofs up to 7:12, mount hinge side parallel to slope. Door opens 75°.

Min Size: 24" X 24" | Max Size: 48" X 96"

Diamond Series™ is a trademark of Activar Construction Products Group , Inc.

QTY	SIZE W x L	STEEL	TYPE
	36" x 30"	☐ RHDG-1WT	LADDER
	30" x 54"	☐ RHDG-2WT	STAIR
	30" x 96"	☐ RHDG-3WT	STAIR
	36" x 36"	☐ RHDG-4WT	LADDER
	48" x 48"	☐ RHDG-5WT	LADDER
	32" x 72"	☐ RHDG-6WT	STAIR
	37" x 30"	☐ RHDG-7WT	LADDER
		STEEL	

Custom sizes available - enter size above

FEATURES AT ADDITIONAL COST:

____ Gray Textured Finish (GT)
____ Red Textured Finish (RT)
____ Bronze Textured Finish (BT)
____ R-9, 1.5 Polyiso Curb (IP)
____ 3/4" Wood Nailer (IW)
____ 1" Fiberboard (IF)
____ Curb Double Wall (CD)
____ Curb Heights from 13" to 22" _____ (H13-H22)
____ Stainless 316 Hinge Pin (SP)
____ Stainless Hardware (SS)
____ Steel Curb, Aluminum Cover (AL)

ACTIVAR INC. CONSTRUCTION PRODUCTS GROUP

JL INDUSTRIES

Distributor:		Project:
Contractor:		Approved By:
Date:	Quantity:	Architect:
Scale: N/A	Pages: 1 of 1	Drawing #:

© 2018 Activar Construction Products Group, Inc.

THE INFORMATION CONTAINED IN THIS DRAWING IS THE SOLE PROPERTY OF ACTIVAR CONSTRUCTION PRODUCTS GROUP, INC. ANY REPRODUCTION IN PART OR AS A WHOLE WITHOUT THE WRITTEN PERMISSION OF ACTIVAR CONSTRUCTION PRODUCTS GROUP, INC. IS PROHIBITED.

9/26/2018